THIRD ANGLE PROJECTION

DO NOT SCALE

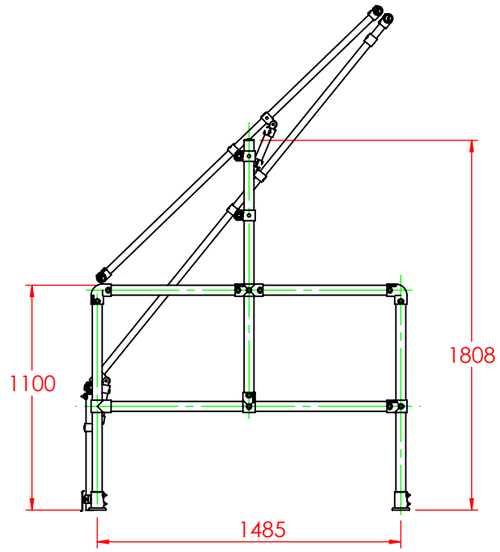

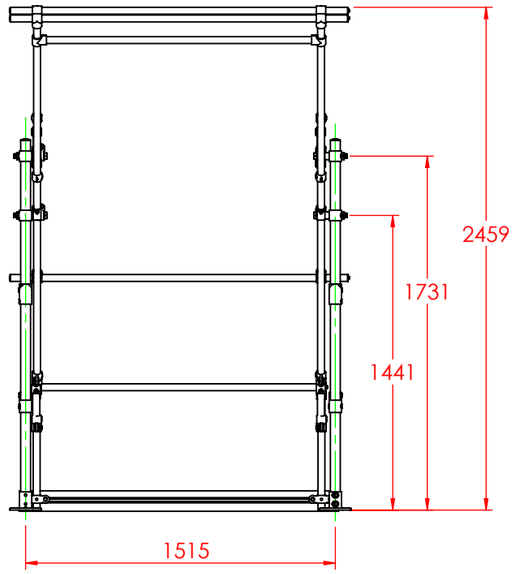

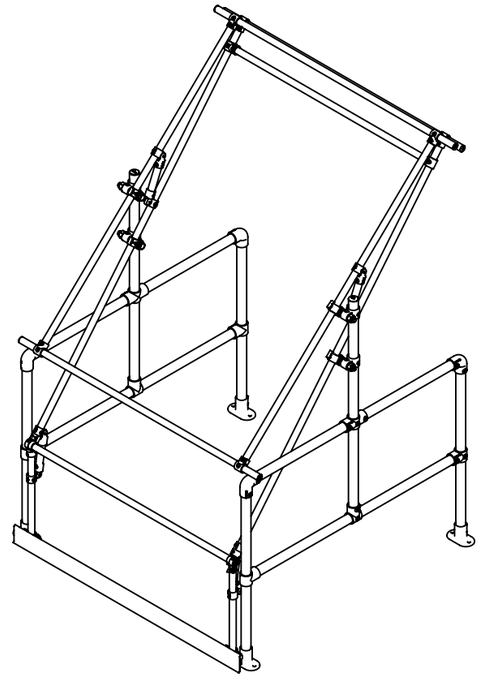

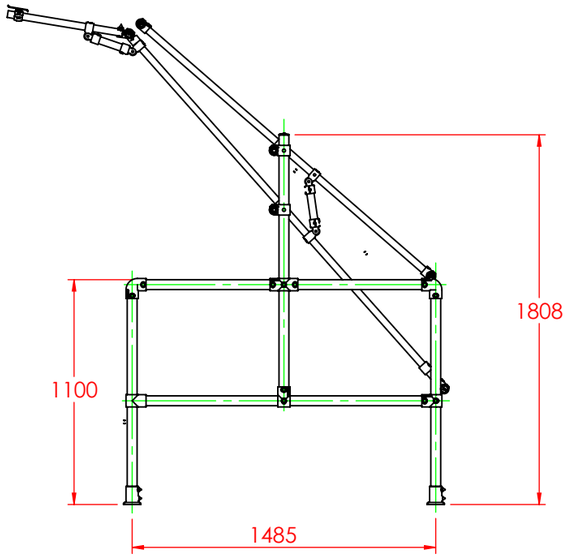

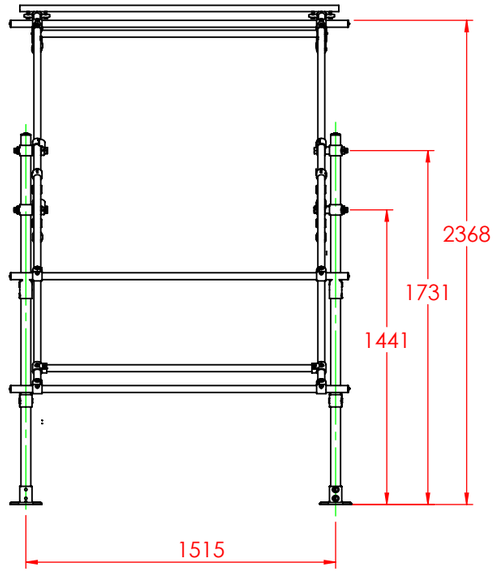

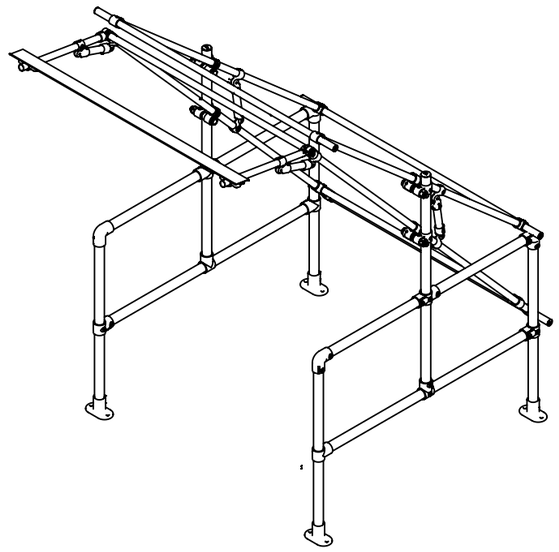

This drawing is the property of Kee Safety Ltd. It is supplied on loan in confidence and must be returned immediately on request. No part of the drawing may be copied or reproduced in any way, nor may the information or design depicted be disclosed without the prior written consent of the owner. All rights reserved

Kee Safety Logistics Ltd.
Unit A2 Cradley Heath Business Park
Cradley Heath, West Midlands B64 7DW
Telephone: 01384 632197 Fax: 01384 632191
Internet: www.keesafetygroup.com
© 2014 Kee Safety Ltd. All rights reserved.

REV NO	MODIFICATIONS	APPROV	DATE	REV NO	MODIFICATIONS	APPROV	DATE
A	FIRST ISSUE	B.R.	07/17				

DESCRIPTION: TYPE C KEE GATE ASSEMBLY		DRAWN	M.K.
		DATE	07/17
		SCALE	NTS
SHORT PART No. KGATE01	LONG PART No. SGPGTYCGV	CHECK	B.R.
		APPRO	
DRAWING No. SGPGTYCGVB		PRODUCT GROUP	